Topic 4 – Sex Linked Traits

Morgans Experiments
- In fruit flies red eyes dominate white eyes

- For parents he used a pure bred red eyed female and a pure bred white eyed male.

- Then crossed two of these F_1

- Followed all Mendelian inheritance patterns except that only the <u>males</u> in the F_2 offspring had white eyes. Why???

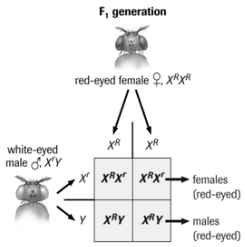

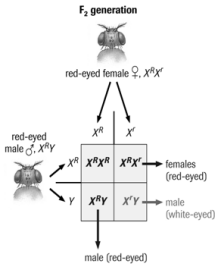

- Humans also have sex-linked genes.

- For a recessive condition, females require two recessive alleles, whereas males only require one recessive allele.

- This explains why more males exhibit colour blindness, hemophilia, near sightedness and night blindness.

- Recessive lethal X linked disorders occur more frequently in males.

<u>Barr body</u> - a small, dark spot of chromatin in the nucleus of a female mammalian cell.

- One of the X chromosomes in females can randomly become inactive in each cell.

- Some cells have one X chromosome active, while some have the other.

- Some cells may express traits in alternate forms, although the cells are genetically identical.

- Example: skin disorder anhidrotic ectodermal dysplasia
    - if a human female is heterozygous,
    - she will have patches of skin that contain sweat glands and patches that do not.
    - In normal skin, the X chromosome with the recessive allele is inactivated and sweat glands are produced.
    - In the afflicted skin patches, the X chromosome with the recessive allele i activated and no sweat glands are produced

Definitions
- autosomal trait - a gene carried on a non-sex chromosome and present in two copies in both sexes

- sex-linked trait - a gene carried on the sex chromosome that is present in both sexes; on copy in one sex, two copies in the other

- Y-linked trait - in humans, a gene carried on the Y chromosome, very rare

- symbols: X^A dominant, X^a recessive

- Suspect sex-linkage when the ratios of phenotypes are different in males and females o do not follow typical ratios

Use the following information to answer the next two questions.

In humans, the allele for normal blood clotting, *H*, is dominant to the allele for hemophilia, *h*. The trait is X-linked.

38. A female hemophiliac marries a man who is not a hemophiliac. The row that indicates the probability of this couple having a child that is a hemophiliac and the sex that the child would be is

Row	Probability	Sex of Affected Child
A.	0.25	male
B.	0.25	either female or male
C.	0.50	male
D.	0.50	either male or female

Numerical Response

6. A woman who is not a hemophiliac has a father who is a hemophiliac. If this woman marries a man who is a hemophiliac, what is the probability of them having a hemophiliac son?

Answer: _____

(Record your **answer as a value from 0 and 1, round to two decimal places** in the numerical-response section on the answer sheet.)

Tay-Sachs disease is a hereditary disease that kills 1 in 360 000 individuals in the general population, but 1 in 4 800 among the Ashkenazi (Eastern European) Jews. The disease disrupts or halts proper formation of lysosomes and increases fat deposition around the nerve sheath. Individuals that are homozygous for the defective allele have Tay-Sachs disease and die at an early age. Studies suggest that heterozygous individuals have a higher survival rate against tuberculosis than the rest of the population. Biochemical tests can be done to determine if parents are carriers.

—from *Cummings, 1994*

What type of inheritance is demonstrated in Tay-Sachs disease?

A. Autosomal recessive
B. Autosomal dominant
C. Sex-linked recessive
D. Sex-linked dominant

A young couple decided to have genetic screening done to determine if they were carriers of Tay-Sachs disease. If both individuals were carriers, what percentage of their offspring would be predicted to have protection from tuberculosis but not have Tay-Sachs disease?

Answer: _____%

In humans, the allele for normal blood clotting, *H*, is dominant to the allele for hemophilia, *h*. The trait is X-linked.

A female hemophiliac marries a man who is not a hemophiliac. The row that indicates the probability of this couple having a child that is a hemophiliac and the sex that the child would be is

Row	Probability	Sex of Affected Child
A.	0.25	male
B.	0.25	either female or male
C.	0.50	male
D.	0.50	either male or female

A woman who is not a hemophiliac has a father who is a hemophiliac. If this woman marries a man who is a hemophiliac, what is the probability of them having a hemophiliac son?

Answer: _____

(Record your **answer as a value from 0 and 1, round to two decimal places** in the numerical-response section on the answer sheet.)

Topic 5 – Pedigree Charts
Notes

- A pedigree chart is like a family tree in which the inheritance of a trait can be traced from parents to offspring

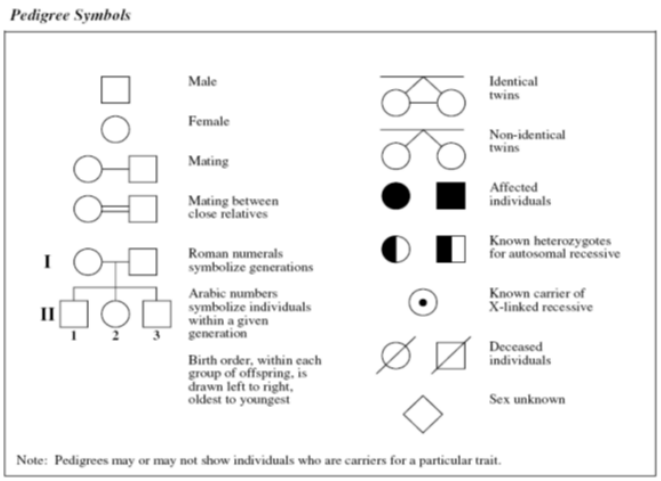

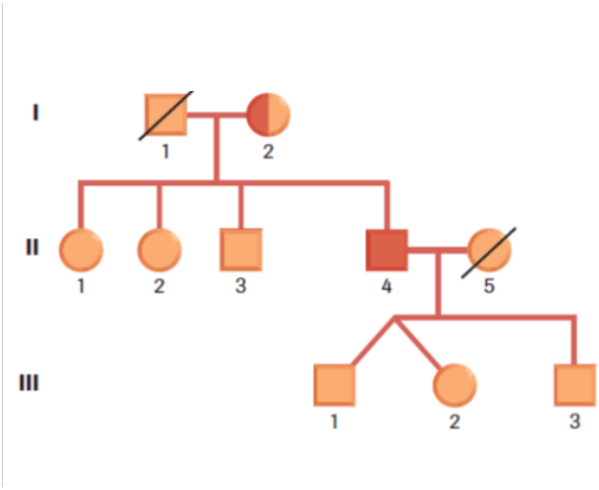

Example
People with albinism do not produce normal pigment levels. Albinism is a recessive trait. Use the pedigree chart in Figure 2 to answer the following questions. Use an uppercase "A" to represent the dominant allele, and a lowercase "a" for the recessive allele.

(a) How many children do the parents A and B have? (b) Indicate the genotypes of the parents. (c) Give the genotypes of M and N.

aa

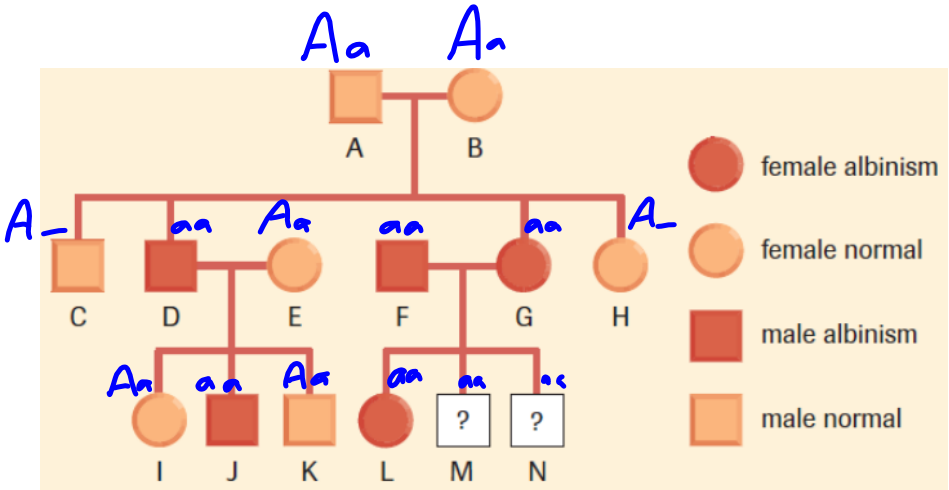

Traits can be inherited through a few different ways

- Autosomal Dominant Inheritance – only need one allele to have the trait/condition
  - If a trait is autosomal dominant you only need to get the gene from one parent in order for you to inherit the trait.
  - One of the parents must display the trait as well

- Autosomal Recessive Inheritance – need 2 copies of allele
  - Both parents must be heterozygous for the trait, or one must have the trait and the other has to be heterozygous
  - Whenever a recessive phenotype shows up in a child of two parents with the dominant phenotype, both parents must be heterozygous for that trait

- X – linked recessive
  - Traits determined by genes on the X chromosome
  - More males are affected b/c they only have one copy of the X chromosome, whereas females have 2 copies
  - Because women need two copies of recessive allele to show the disease, far fewer women affected than men

Examples:

Phenylketonuria (PKU) is a genetic disorder caused by a dominant allele. Individuals with PKU are unable to metabolize a naturally occurring amino acid, phenylalanine. If phenylalanine accumulates, it inhibits the development of the nervous system, leading to mental retardation. The symptoms of PKU are not usually evident at birth, but can develop quickly if the child is not placed on a special diet.

The pedigree in Figure 3 shows the inheritance of the defective PKU allele in a family.

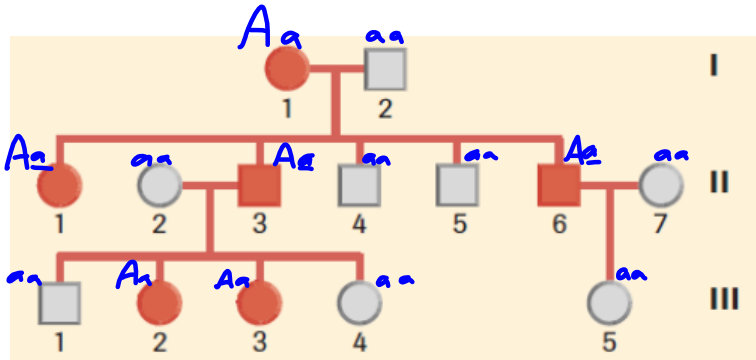

Figure 3

(a) How many generations are shown by the pedigree? 3

(b) How many children were born to the parents of the first generation? 5

(c) What is the genotype of individuals 1 and 2, generation I?

(d) How is it possible that in generation II, some of the children showed symptoms of PKU, while others did not? (Hint: Use a Punnett square to help with your explanation.)

(e) For individuals 6 and 7, in generation II, a child without PKU symptoms was born. Does this mean that they can never have a child with PKU? Explain your answer.

Use the following information to answer the next question.

Larry and Danny Gomez, two boys known as "Wolf Boys," have made the circus their adoptive family. Both boys perform as trampoline acrobats, and Danny also does motorcycle stunts. The boys have a condition called congenital hypertrichosis (CH), which is a very rare X-linked dominant inherited condition. CH is characterized by the growth of dark hair over the body, particularly on the face and upper torso in males. The palms of the hands, soles of the feet, and mucus membranes are not affected by this condition. A press release about the circus stated that Larry and Danny have travelled to many countries in search of a cure. When asked about the search for a cure in an interview by David Staples of *The Edmonton Journal* (May 14, 1997), Larry said, "I'd never take it off. I'm very proud to be who I am." Outside the circus, the boys enjoy activities typical of most boys their age. Danny likes to play video and board games, and Larry is interested in science and is taking astronomy by correspondence.

Researchers continue to investigate the process of hair growth and the causes of hair distribution at the molecular level. The relevant molecules are expected to act on hair follicles. Hair follicle distribution in humans is primarily a hormone-dependent secondary sex characteristic. In addition to searching for a cure for CH, research in this area may also have significant applications in the treatment of acquired or inherited baldness.

The incidence of CH is very rare: only about 50 affected individuals have been reported since the Middle Ages. The incidence of this condition is considerably higher in a small Mexican village than it is in the rest of the human population. In 1984, researcher Macias-Flores studied CH in a large, five-generation Mexican family and found 19 individuals with CH. A partial pedigree showing the sampled individuals from the Macias-Flores study is shown below.

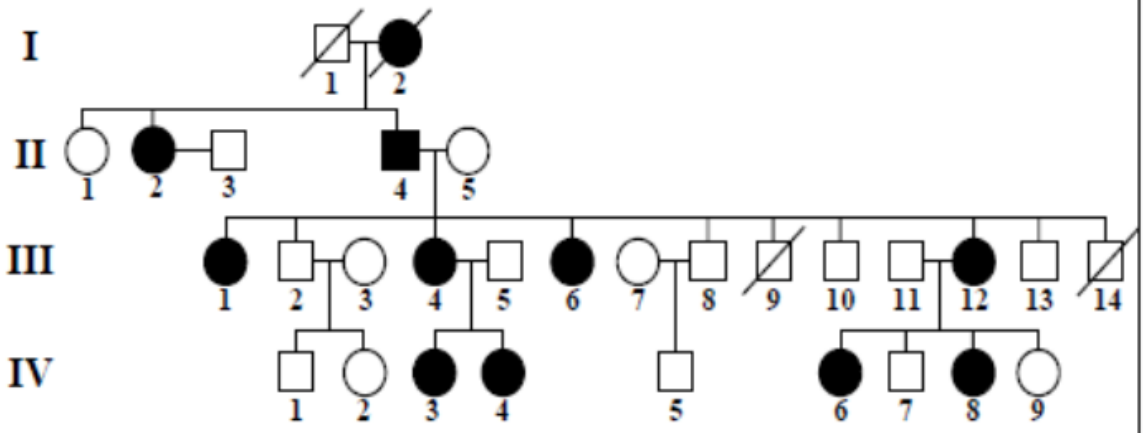

—from *Staples, 1997, and Figuera et al., 1995*

ritten Response – 15% | Staple your word-processed response for **this** question to this page.

] Write a unified response on the following aspects of CH.

- **Identify** the hormone responsible for secondary sex characteristics in males **or** females, and **describe** the secondary sex characteristics, including hair follicle distribution patterns, resulting from this hormone's stimulation.

- **Identify** the genotypes for individuals II-4, II-5, III-11, III-12, IV-6, IV-7, IV-8, and IV-9 in one of the lines of inheritance on the pedigree. (Provide a key for the allele symbols you use.) **Construct** a Punnett square to predict the probability of individuals III-11 and III-12's next child being a male with CH. **Explain** why more females than males inherit CH in generation III.

Pedigree of a Family with Cystic Fibrosis

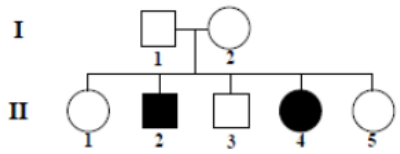

Note: Cystic fibrosis in this family is caused by a recessive allele that is found on chromosome 7.

Prior to performing amniocentesis, a genetic counsellor collected pedigree information regarding the incidence of cystic fibrosis within this family. The row that indicates the genotypes of individuals **I-1**, **I-2**, and **II-2** is

Row	I-1	I-2	II-2
A.	*Aa*	*Aa*	*aa*
B.	*AA*	*aa*	*Aa*
C.	X^AY	X^AX^A	X^aY
D.	X^AY	X^AX^a	X^AY

Use the following information to answer the next question.

Pedigree of Human ABO Blood Types

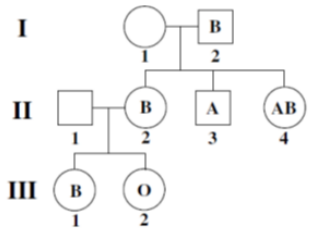

The genotype of individual **I-1** is

A. *ii*
B. I^Ai
C. I^Bi
D. I^AI^A

Use the following information to answer the next three questions.

In the hypothetical pedigree below, shaded individuals have sickle cell anemia and are homozygous for the defective allele Hb^S. The normal allele is Hb^A. Carriers of the Hb^S allele are not identified in the pedigree.

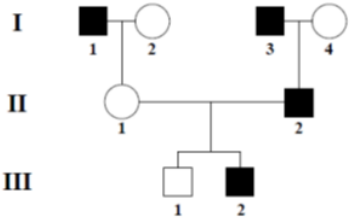

Individual **III-1** has blood type A. His genotype could be

A. $I^Ai\ Hb^AHb^S$
B. $I^AI^A\ Hb^SHb^S$
C. $I^AI^B\ Hb^AHb^S$
D. $I^AI^A\ Hb^AHb^A$

If individual **II-1** has blood type A and individual **II-2** has blood type B, which of the following genotypes would be possible for their third child, if they had one?

A. $I^Ai\ Hb^AHb^S$
B. $I^AI^A\ Hb^SHb^S$
C. $I^BI^B\ Hb^AHb^S$
D. $I^AI^B\ Hb^AHb^A$

Which of the following rows indicates the relationship between the I^A and I^B alleles and the relationship between the I^A and i alleles for the blood type gene?

Row	Relationship between I^A and I^B	Relationship between I^A and i
A.	codominant	codominant
B.	codominant	dominant-recessive
C.	dominant-recessive	codominant
D.	dominant-recessive	dominant-recessive

Use the following information to answer the next three questions.

A dominant allele, X^E, carried on the X chromosome causes the formation of faulty tooth enamel and causes either very thin or very hard enamel.

Hypothetical Pedigree Showing the Incidence of Faulty Tooth Enamel

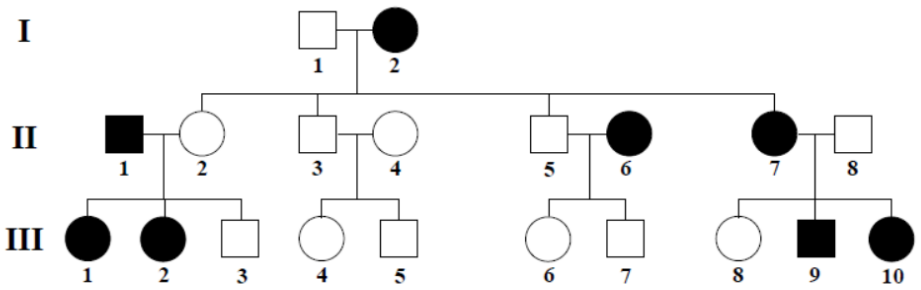

The genotypes of individuals **II-6** and **III-7** are identified in row

Row	II-6	III-7
A.	X^EX^E	X^EY
B.	X^EX^e	X^eY
C.	X^eX^e	X^EY
D.	X^EX^E	X^eY

A woman heterozygous for faulty tooth enamel marries a man with normal tooth enamel. What is the probability that their first child will be a boy with normal tooth enamel?

Answer: _____

(Record your **answer as a value from 0 to 1, rounded to two decimal places,** in the numerical-response section on the answer sheet.)

The faulty tooth enamel trait will appear in all of the daughters but none of the sons if the children have a father with

A. normal tooth enamel and a mother with normal tooth enamel
B. normal tooth enamel and mother with faulty tooth enamel
C. faulty tooth enamel and a mother with normal tooth enamel
D. faulty tooth enamel and a mother with faulty tooth enamel